REVISION RECORD			
LTR	ECO NO:	APPROVED:	DATE:

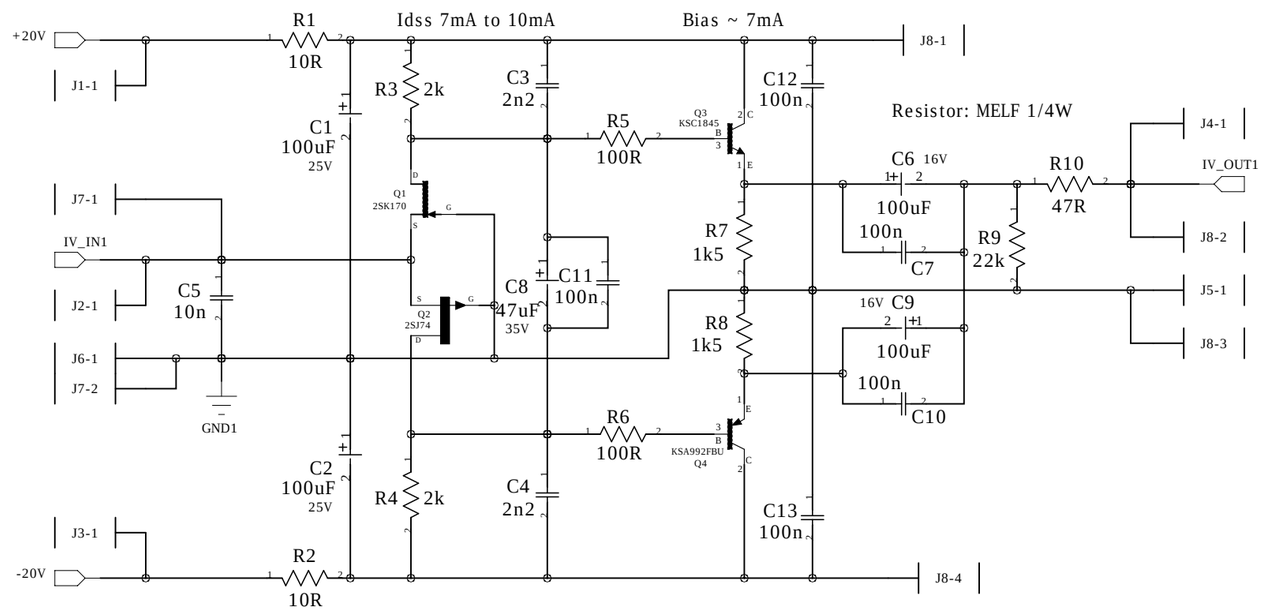

COMPANY: FETAudio			
TITLE: D1 V2 - Zen IV			
CODE: <Code>	SIZE: B	DRAWING NO: FET-20220108-01	REV: 1.0
SCALE: <Scale>		SHEET: 1 OF 5	

DRAWN: Spencer Cheung	DATED: 2022-01-08
CHECKED: <Checked By>	DATED: <Checked Date>
QUALITY CONTROL: <QC By>	DATED: <QC Date>
RELEASED: <Released By>	DATED: <Release Date>